11. EXPLODED VIEW

FULL ASSEMBLY (WASHER & DRYER)

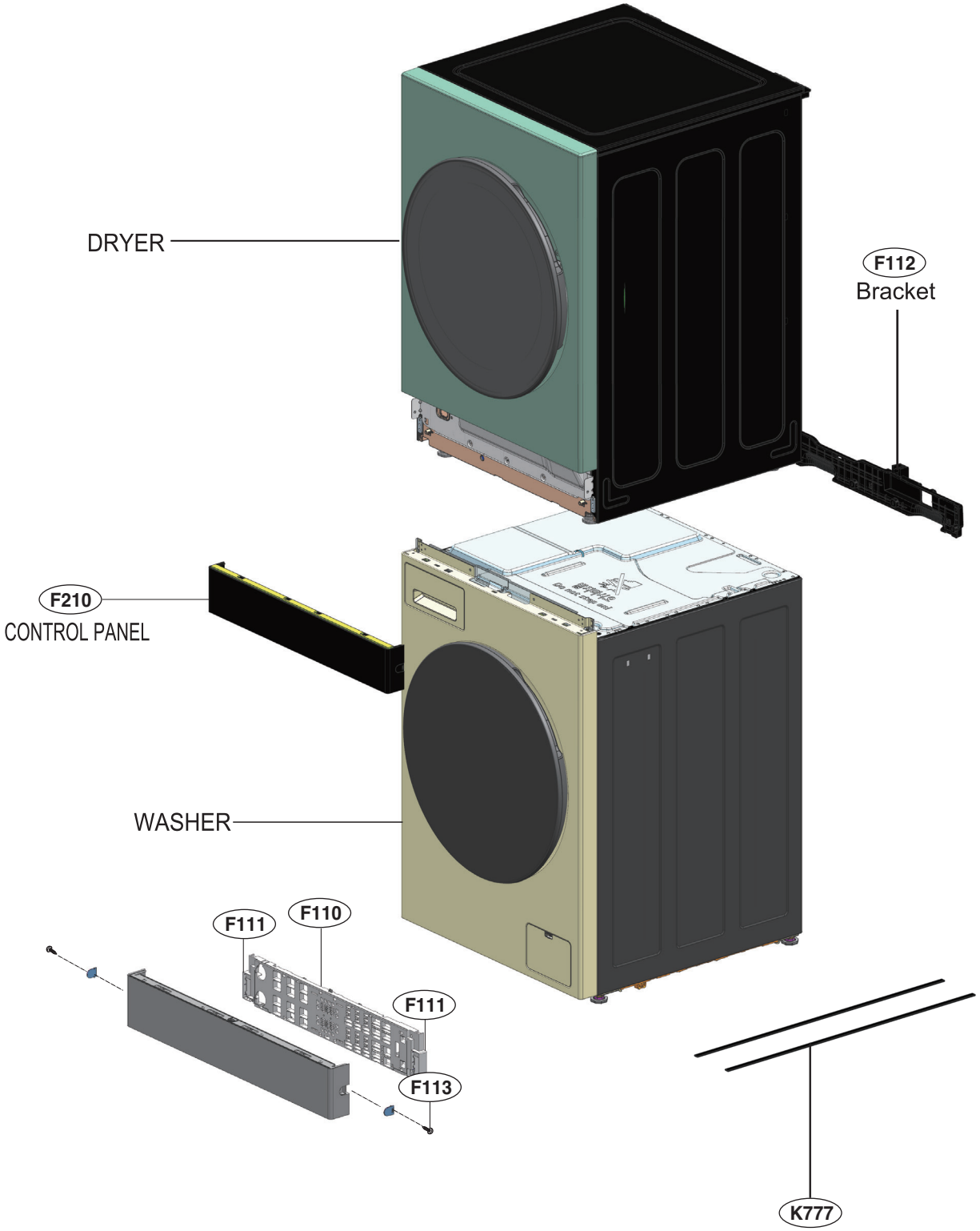

EXPLODED VIEW - DRYER

CABINET COVER & DOOR ASSEMBLY

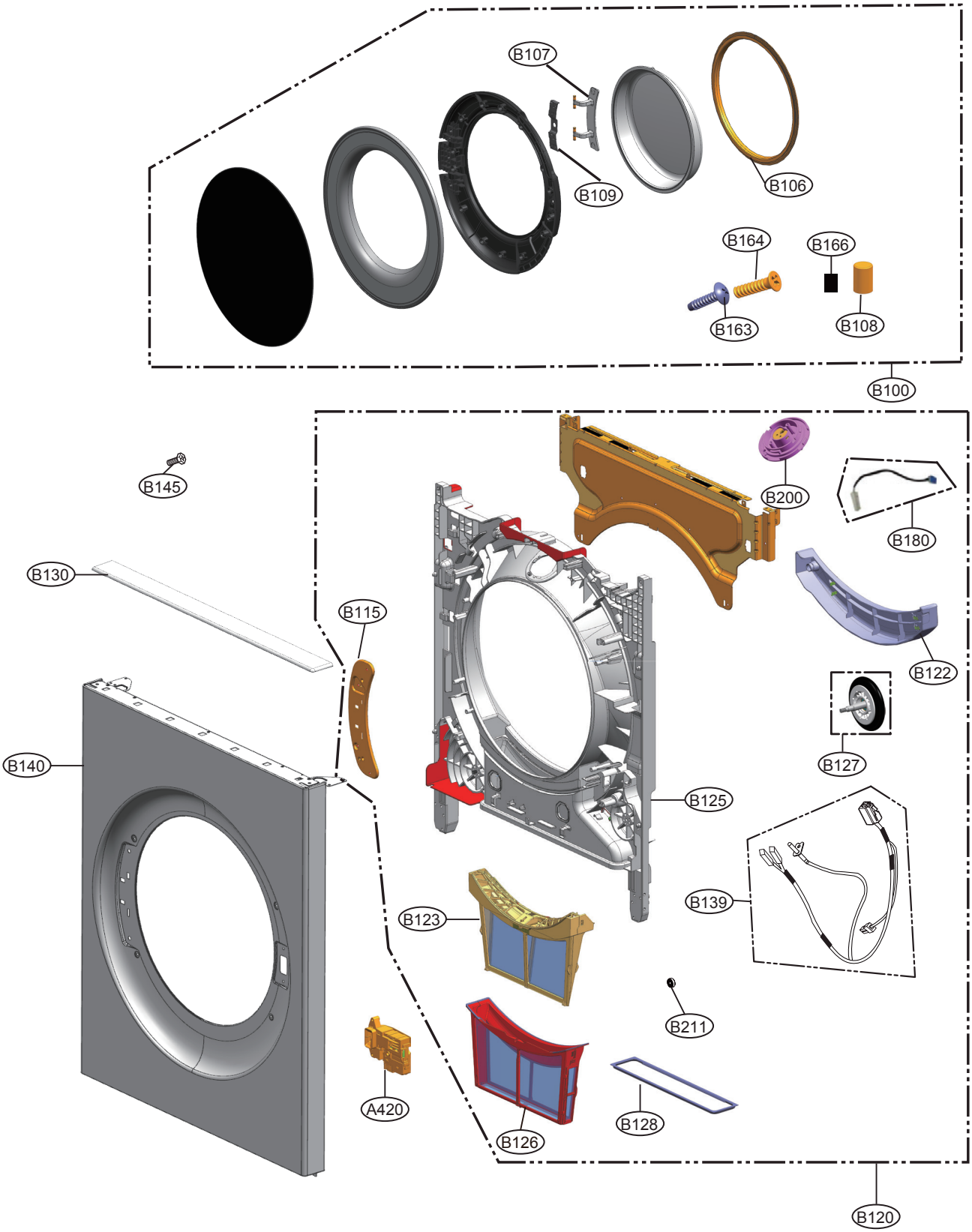

EXPLODED VIEW - DRYER

BASE ASSEMBLY

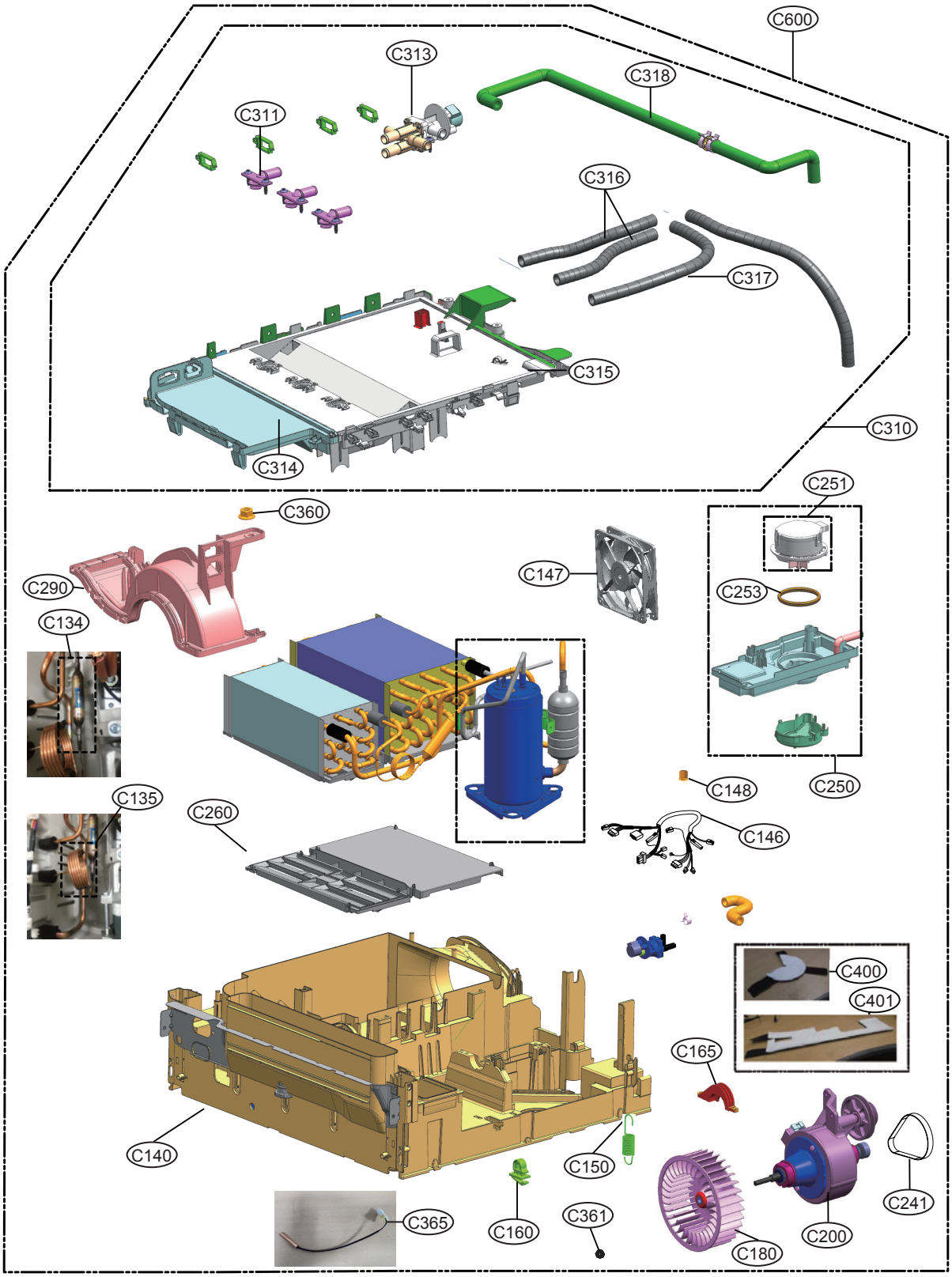

EXPLODED VIEW - DRYER

DRUM & REAR COVER & ACCESSORY & CABINET ASM

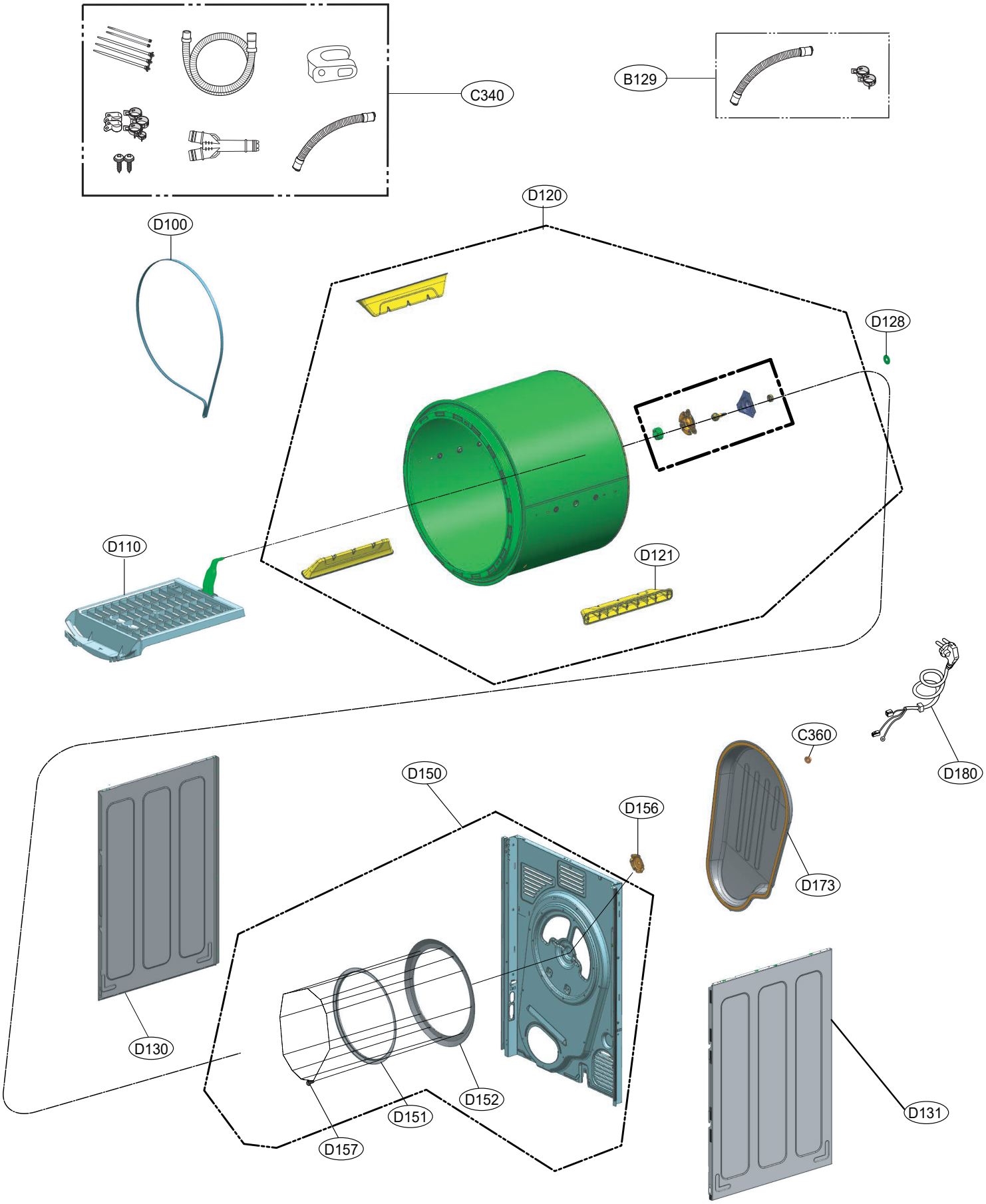

EXPLODED VIEW - DRYER

TOP PLATE & TOP FRAME

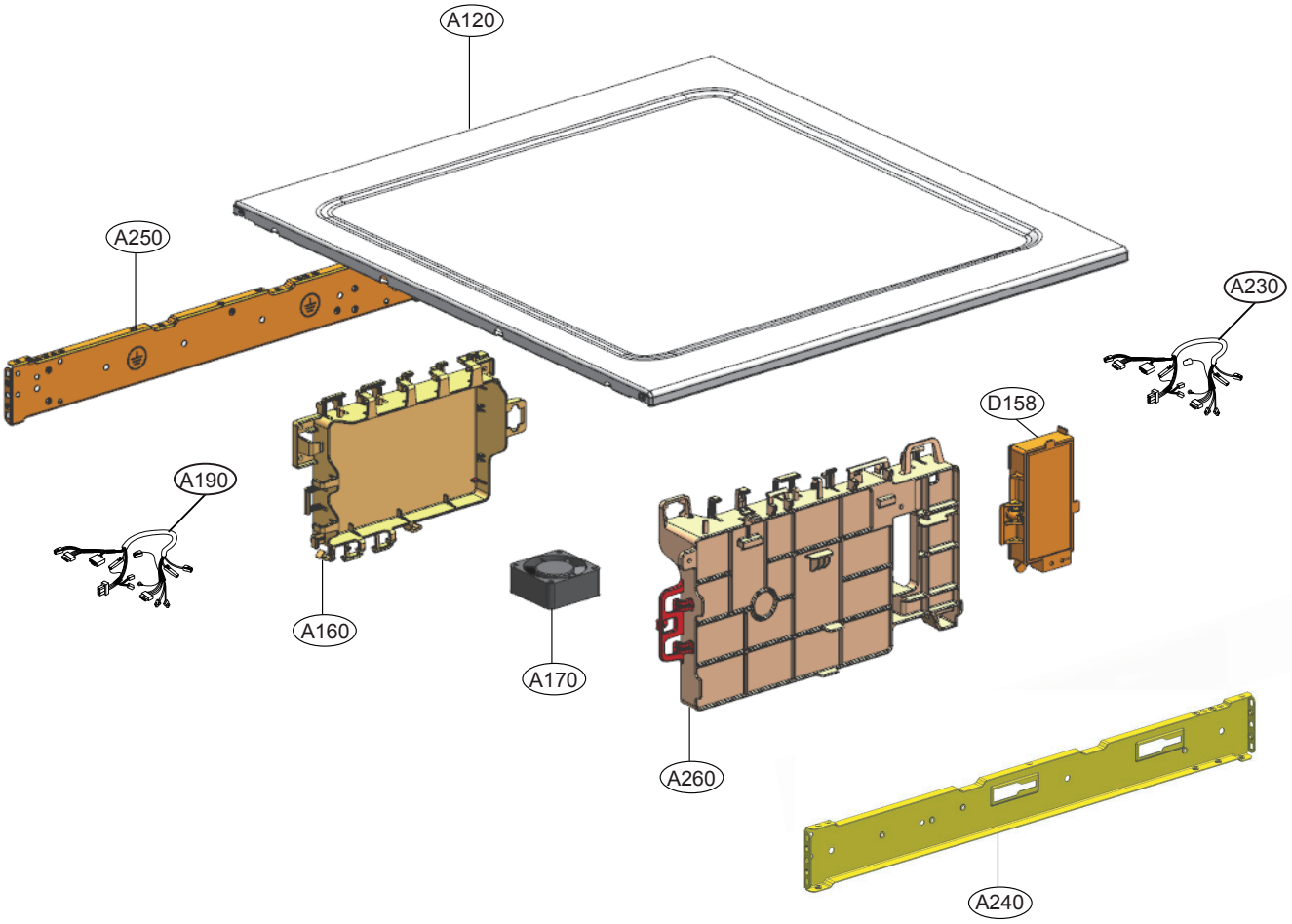

EXPLODED VIEW - WASHER

CABINET AND DOOR ASSEMBLY: WASHER

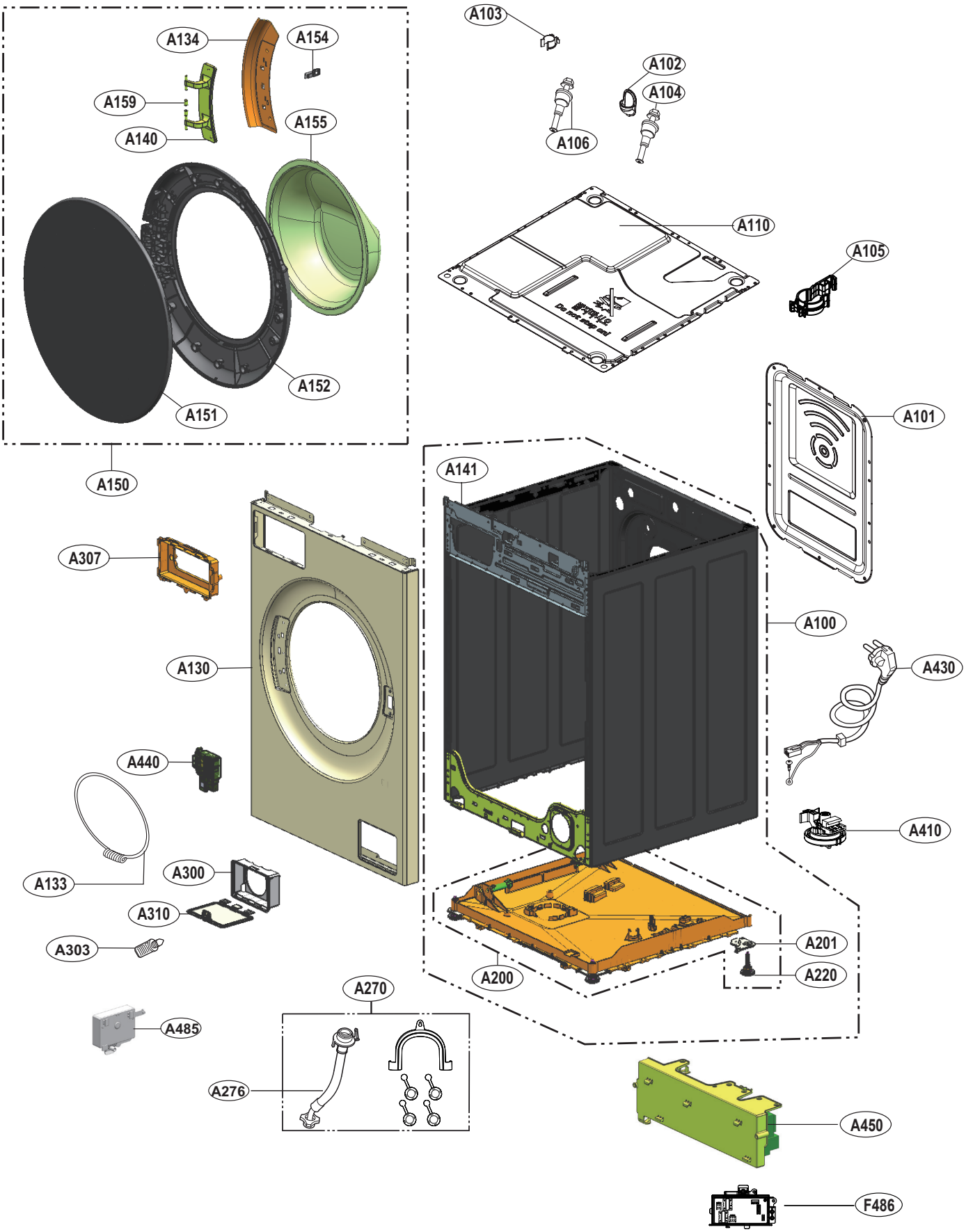

EXPLODED VIEW - WASHER

DRUM AND MOTOR ASSEMBLY: WASHER

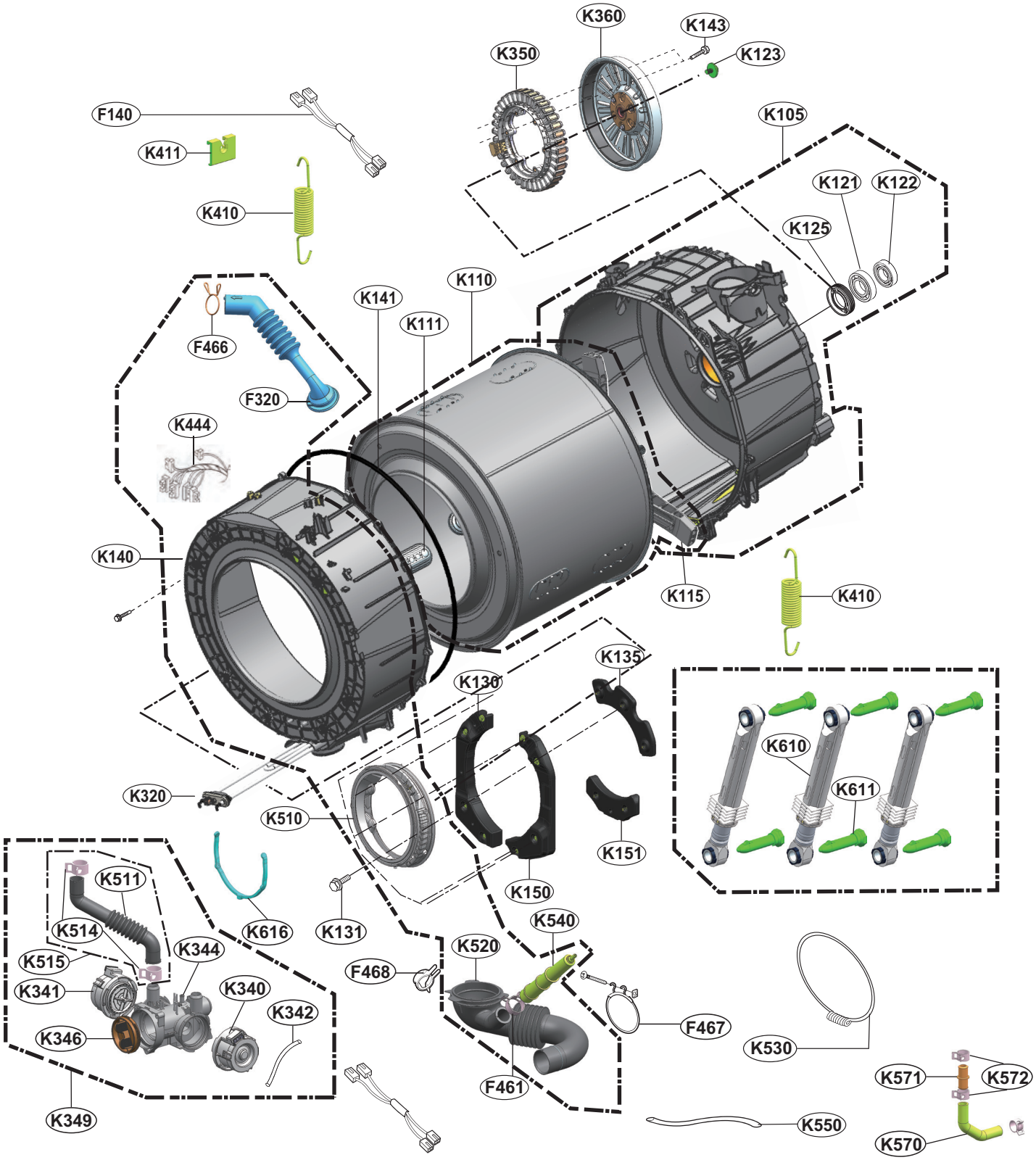

EXPLODED VIEW - WASHER
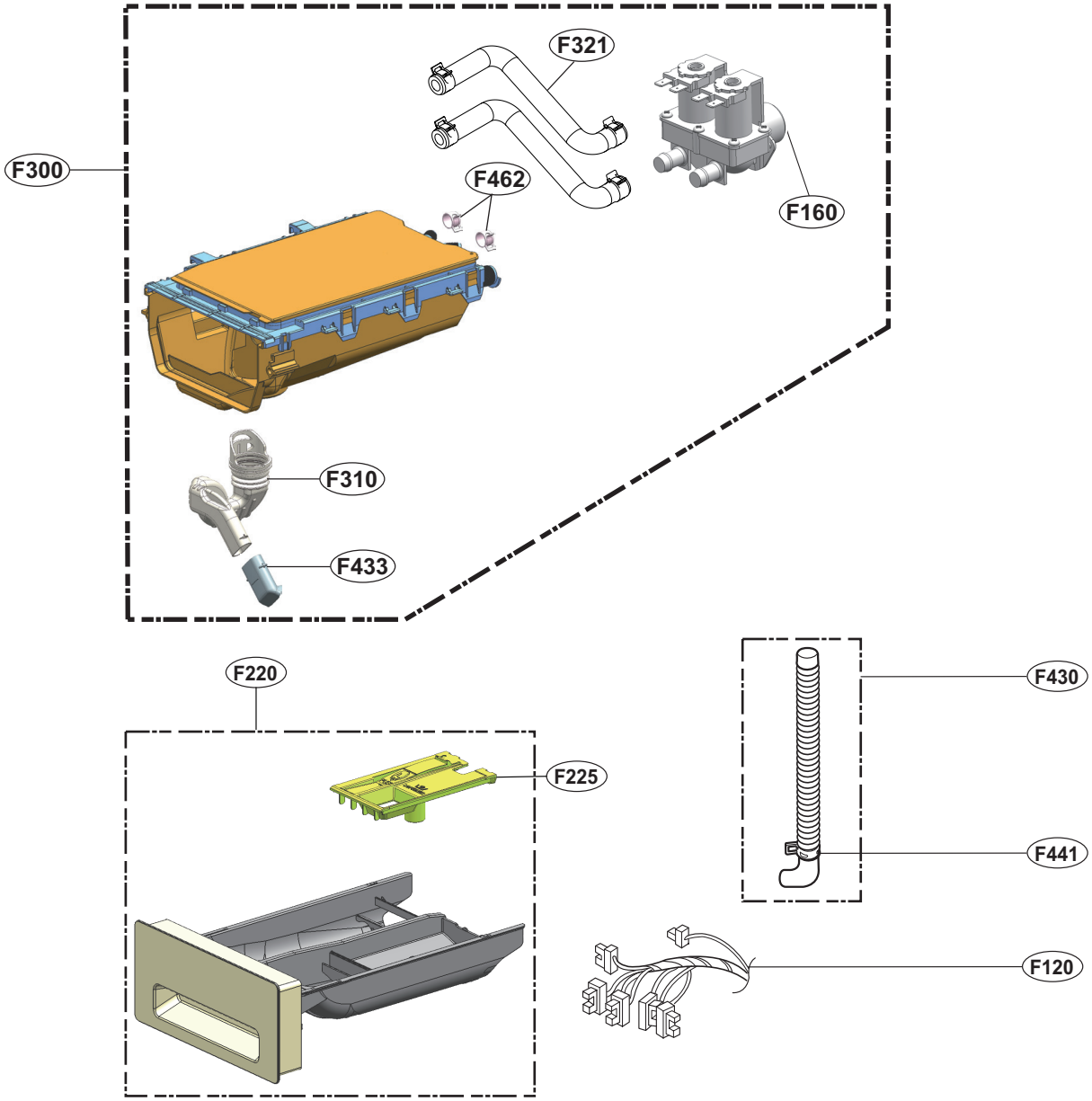
DISPENSER / DRAWER PANEL ASSEMBLY